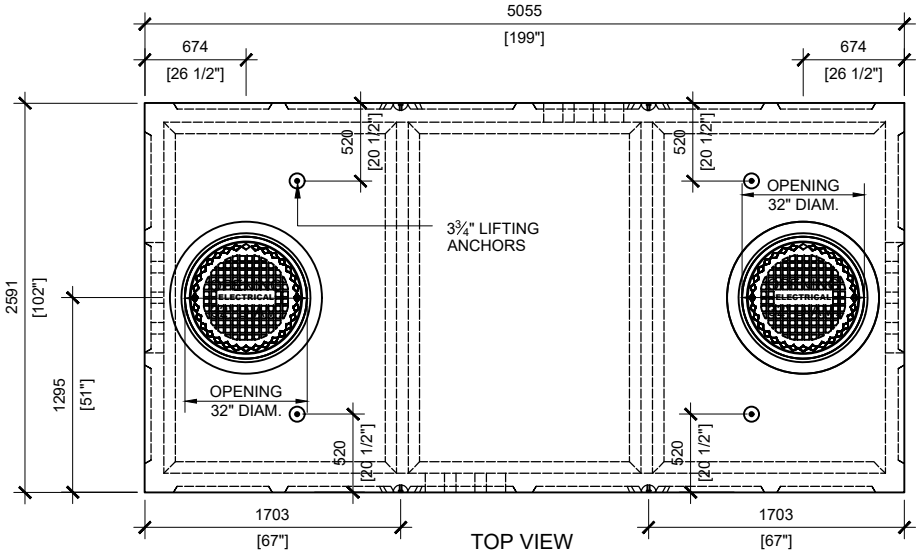

TOP VIEW
SCALE: 1/50

GENERAL NOTES:

1. CABLE ENTRY OPENINGS - 4-¾" PVC SEALS
2. DELIVERY IS MADE BY CRANE-EQUIPPED TRUCKS
3. EXCAVATION MUST BE READY, SAFE AND ACCESSIBLE FOR UNLOADING FROM THE REAR OF THE TRUCK.
4. MIN OVERHEAD CLEARANCE OF 18FT (5.5 METRES) IS REQUIRED
5. ALL UNITS MUST BE HANDLED WITH PROPER LIFTING EQUIPMENT (I.E. SPREADER BAR)
6. MAXIMUM BURIAL DEPTH 2084mm EXCAVATION OR 300mm FROM FINISHED GRADE TO TOP OF PRECAST SLAB

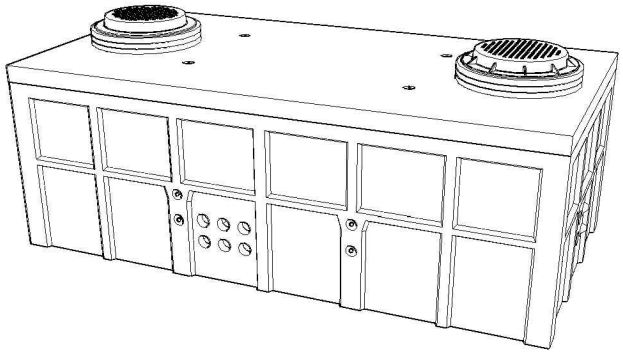

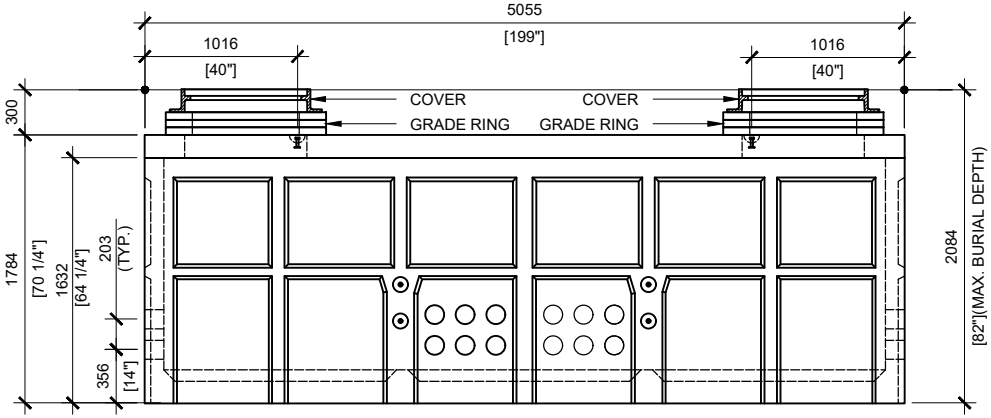

FRONT VIEW
SCALE: 1/50

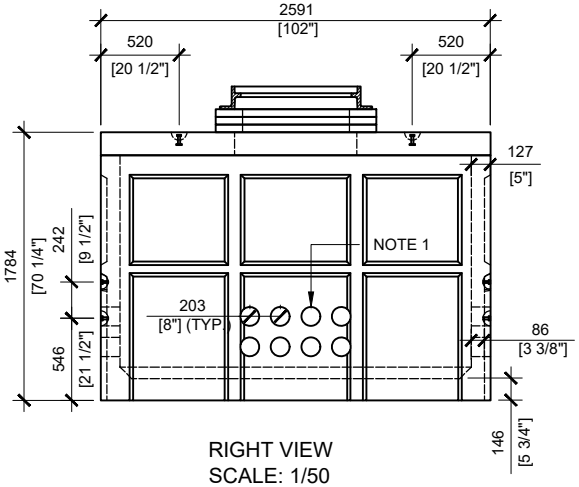

RIGHT VIEW
SCALE: 1/50

BROOKLIN CONCRETE PRODUCTS

MANUFACTURED:
BROOKLIN, ON
1-800-655-3430

CONCRETE: 35MPa / 5,000PSI
AIR ENTRAINMENT: 5-8%
REINFORCEMENT : STEEL TO CSA
CAN A23.1 / A23.3. G30.18 Fy=400MPa

WEIGHT:
LID 9,471lbs/ 4,295kgs
TOP 21,285lbs / 9,655kgs
BCP505M - 30,756lbs / 13,950kg

DRAWN BY:
N.CHAN

DATE:
MAY/2020

BCP505M

PRECAST CONCRETE UTILITY MANHOLE