BROOKLIN
CONCRETE PRODUCTS

NEW PRODUCT

# POLE BUNKS
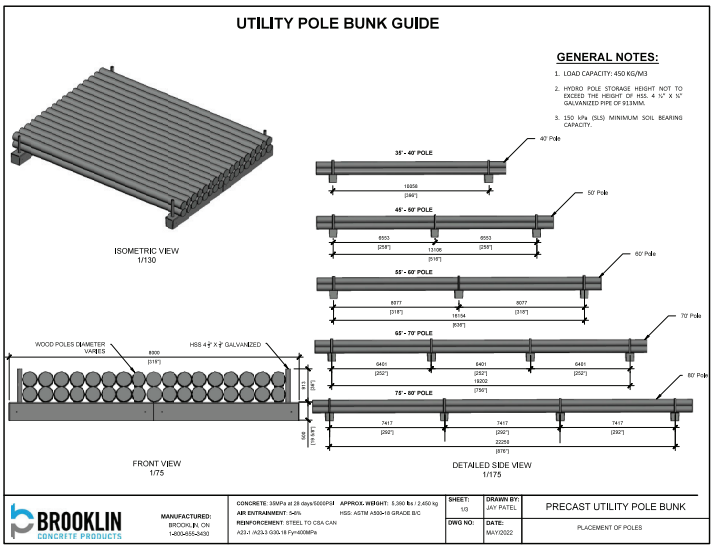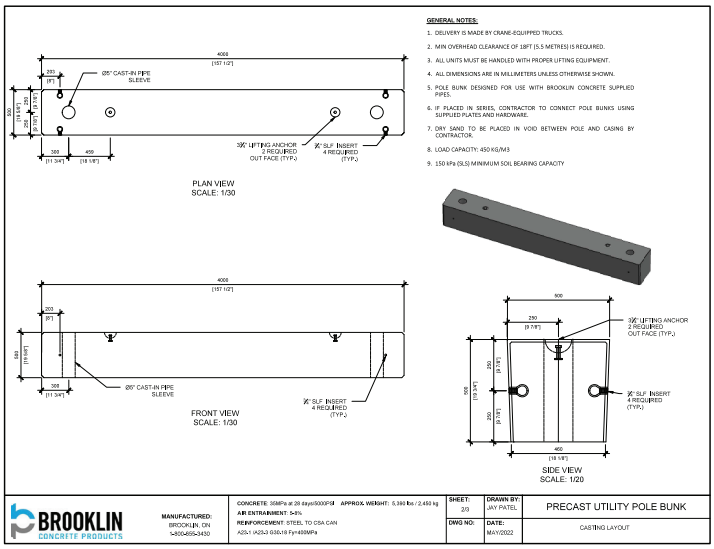
## A safe, engineered design to store poles
## all lengths & thickness