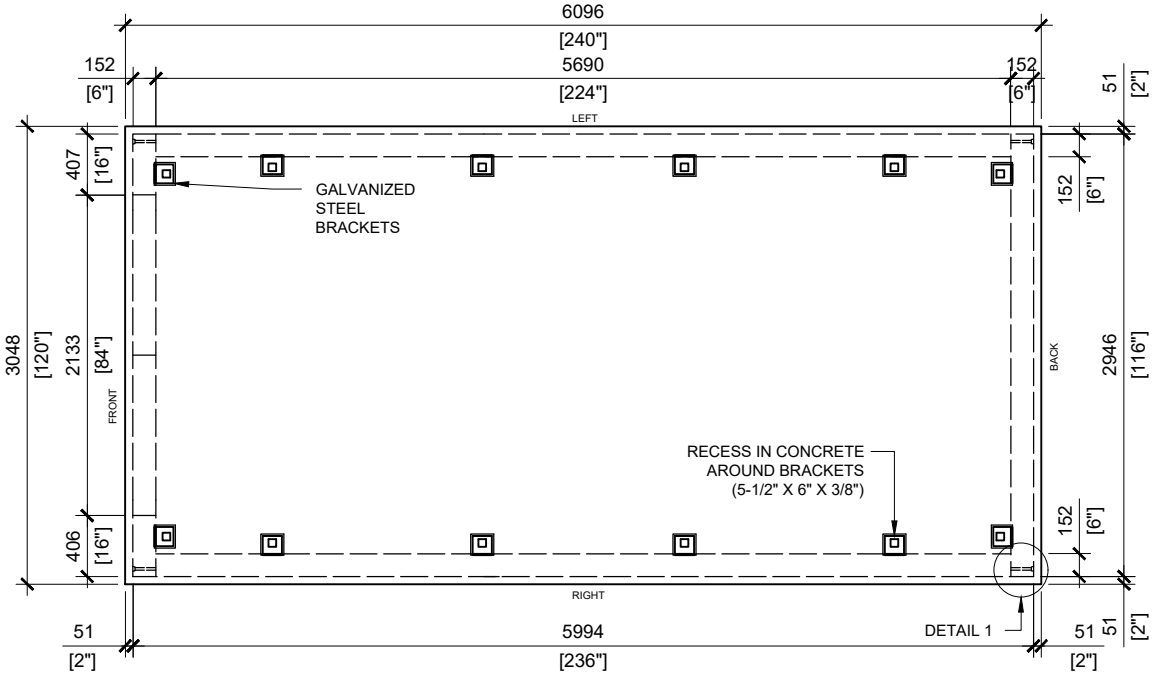


TOP VIEW
SCALE: 1/50

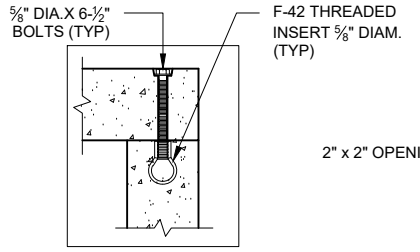


DETAIL 1
WALL- WALL CONNECTION
SCALE: 1/16

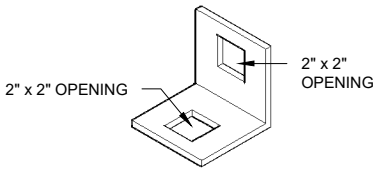


STEEL ANGLE PLATE &
OPENING FOR DETAIL 2

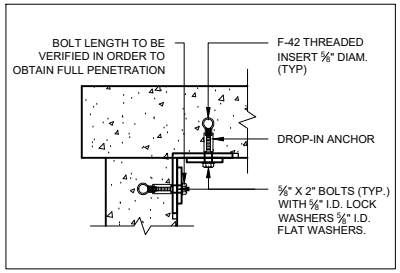


DETAIL 2
ROOF/FLOOR-WALL CONNECTION
SCALE: 1/16

**GENERAL NOTES:**

1. ALL MATERIALS AND WORKMANSHIP CONFORM TO THE OBC2012
2. STRUCTURE HAS BEEN DESIGNED IN ACCORDANCE WITH PART 4 OF THE OBC 2012
3. THE STRUCTURE IS TO BE FOUNDED ON FREE DRAINING NON-FROST SUSCEPTIBLE MATERIAL WITH A SOIL BEARING CAPACITY OF NO LESS THAN 30kPa
4. CONCRETE ADHESIVE IS TO BE APPLIED TO THE JOINTS BETWEEN THE WALLS AND THE FLOOR/ROOF SLABS
5. CONCRETE MATERIALS CONFORMS TO CSA A23.1
6. REINFORCING STEEL CONFORMS TO CSA G30.18/ W.W.M. CONFORMS TO CSA G30.5

**DIMENSIONS CAN BE
MODIFIED UPON REQUEST**

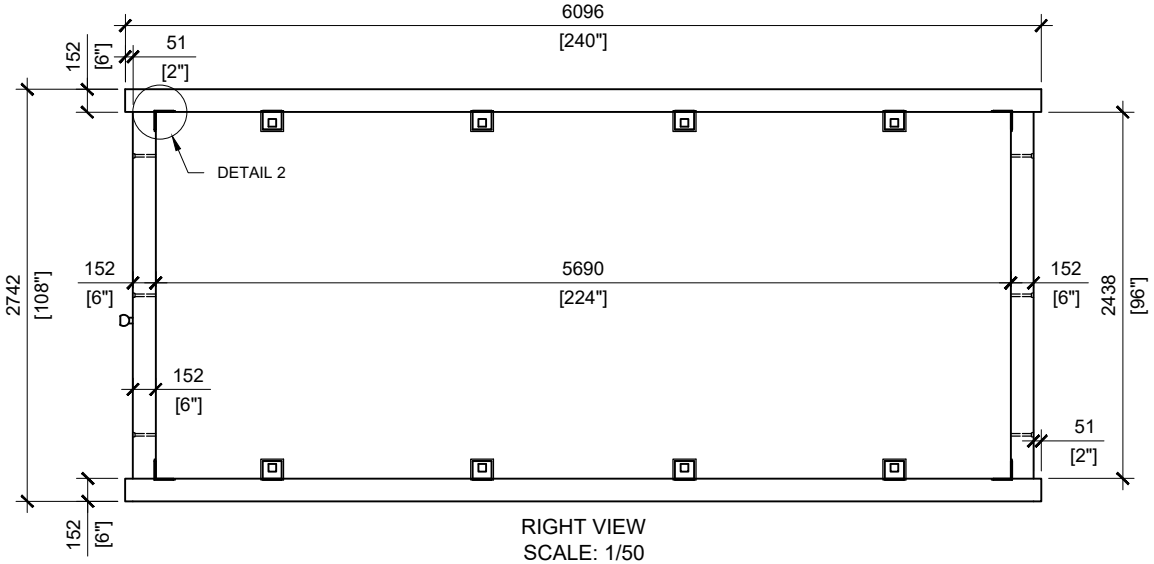


RIGHT VIEW
SCALE: 1/50

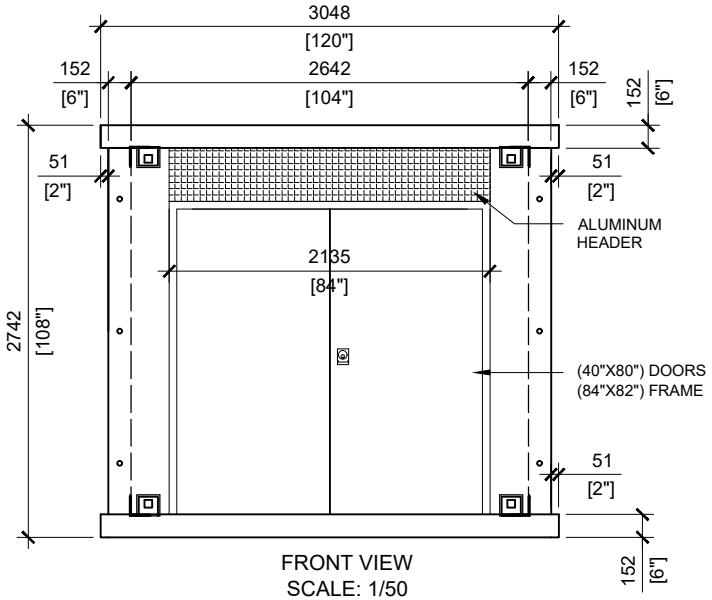


FRONT VIEW
SCALE: 1/50

BROOKLIN CONCRETE PRODUCTS

**MANUFACTURED:**
LINDSAY, ON
1-800-655-3430

**CONCRETE:** 35MPa / 5,000PSI
**AIR ENTRAINMENT:** 5-8%
**REINFORCEMENT :** STEEL TO CSA
CAN A23.1 / A23.3. G30.18 Fy=400MPa

| **WEIGHT:** | |
|---|---|
| FLOOR: | 14,912lbs / 6,778kg |
| BACK: | 4,883lbs / 2,219kg |
| 2 SIDES: | 11,133lbs / 5,060kg |
| FRONT: | 794lbs / 361kg EA. |
| ROOF: | 14,912lbs / 6,778kg |

**DRAWN BY:** SR

**DATE:** JUNE/2023

# MODEL 200

PRECAST CONCRETE UTILITY BUILDING

**TYPICAL USE**: STORAGE / ELECTRICAL BUILDING