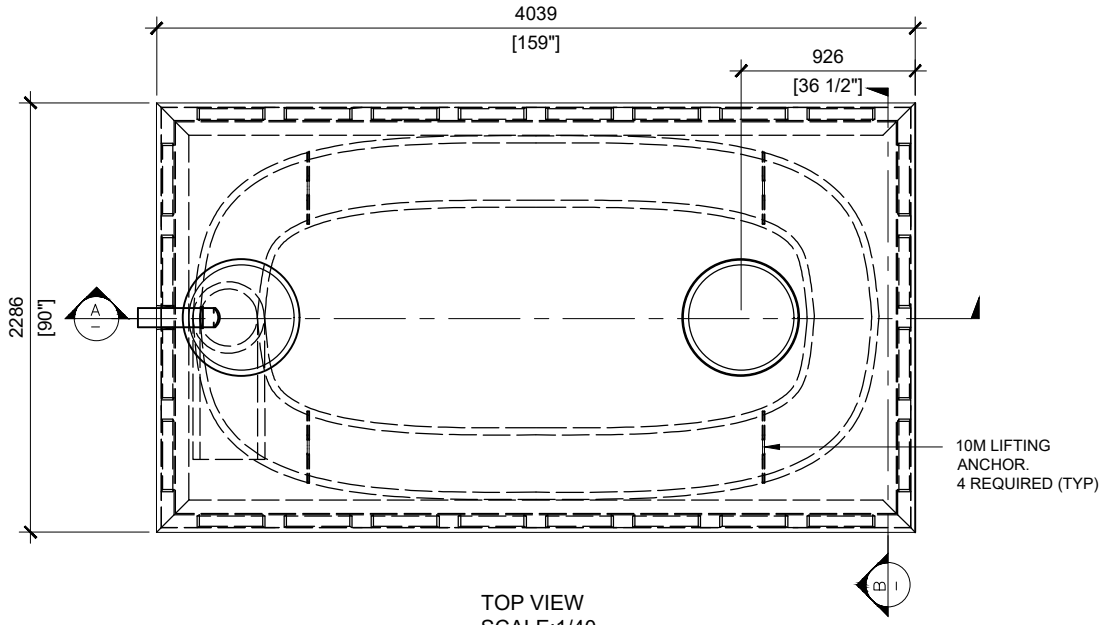

TOP VIEW
SCALE:1/40

GENERAL NOTES:

1. UNITS ARE SEALED WITH BUTYL TAPE AT THE JOINTS
2. DELIVERY IS MADE BY CRANE-EQUIPPED TRUCKS
3. EXCAVATION MUST BE READY, SAFE AND ACCESSIBLE FOR UNLOADING FROM THE REAR OF THE TRUCK.
4. MIN OVERHEAD CLEARANCE OF 18FT (5.5 METRES) IS REQUIRED
5. ALL UNITS MUST BE HANDLED WITH PROPER LIFTING EQUIPMENT (I.E. SPREADER BAR)
6. MAXIMUM BURIAL DEPTH = 1 METRE IN FIRM SOIL AWAY FROM ANY VEHICULAR TRAFFIC

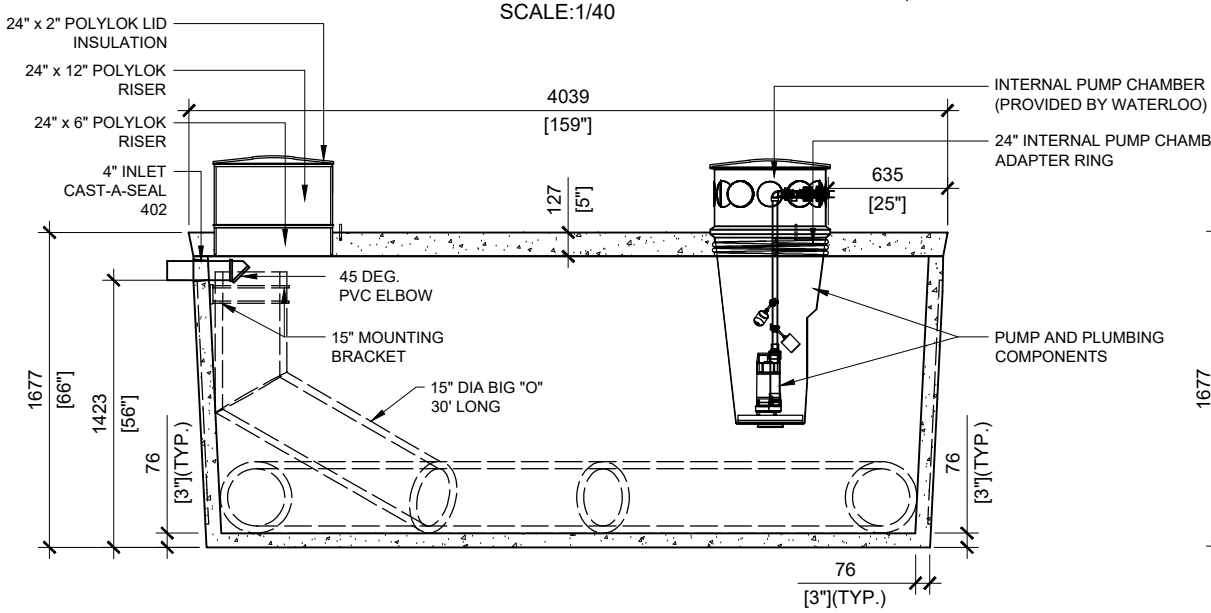

SECTION A
SCALE:1/40

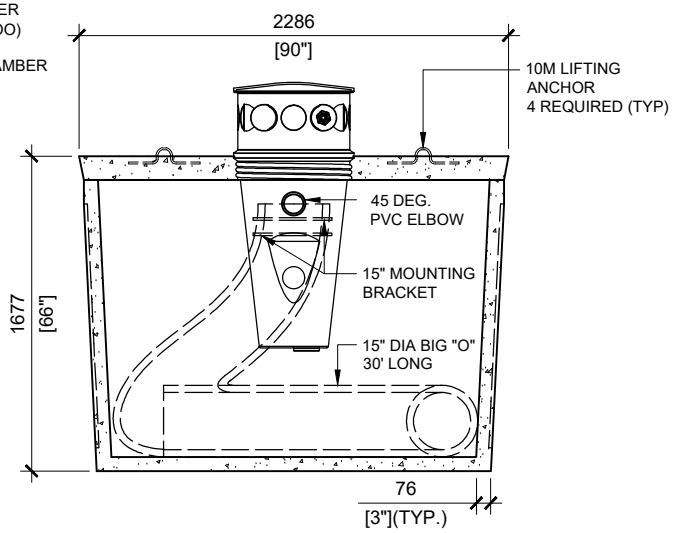

SECTION B
SCALE:1/40

BROOKLIN CONCRETE PRODUCTS **MANUFACTURED:** BROOKLIN, ON 1-800-655-3430	**CONCRETE**: 35MPa/5000PSI **AIR ENTRAINMENT**: 6-8% **REINFORCEMENT**: STEEL TO CSA CAN A23.1 /A23.3 G30.18 Fy=400MPa	**WEIGHT:** 17,895lbs / 8,120kg CPA CERTIFIED	**DRAWN BY:** N.CHAN **DATE:** MAR/2020	WATERLOO ADIPC-9000 2,000 IMPERIAL GALLON / 9,000 LITRES