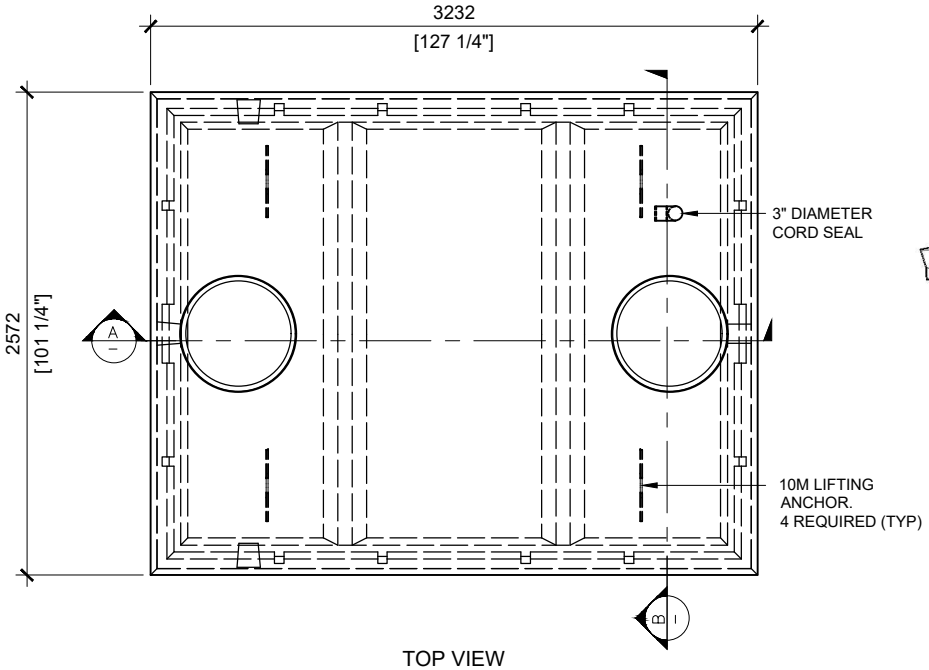

TOP VIEW
SCALE:1/40

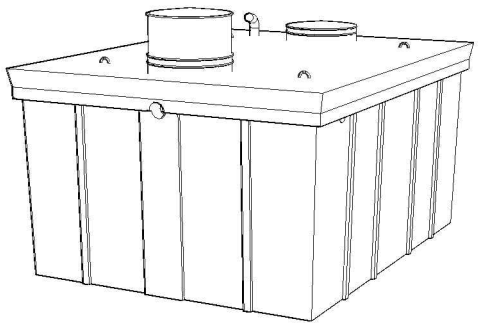

GENERAL NOTES:

1. UNITS ARE SEALED WITH BUTYL TAPE AT THE JOINTS
2. DELIVERY IS MADE BY CRANE-EQUIPPED TRUCKS
3. EXCAVATION MUST BE READY, SAFE AND ACCESSIBLE FOR UNLOADING FROM THE REAR OF THE TRUCK.
4. MIN OVERHEAD CLEARANCE OF 18FT (5.5 METRES) IS REQUIRED
5. ALL UNITS MUST BE HANDLED WITH PROPER LIFTING EQUIPMENT
6. MAXIMUM BURIAL DEPTH = 1 METRE IN FIRM SOIL AWAY FROM ANY VEHICULAR TRAFFIC

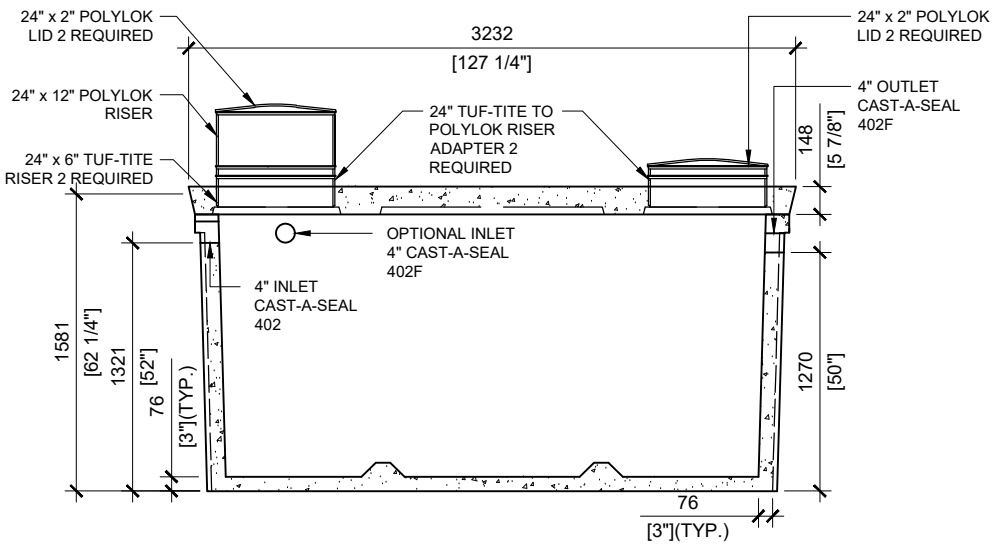

SECTION A
SCALE:1/40

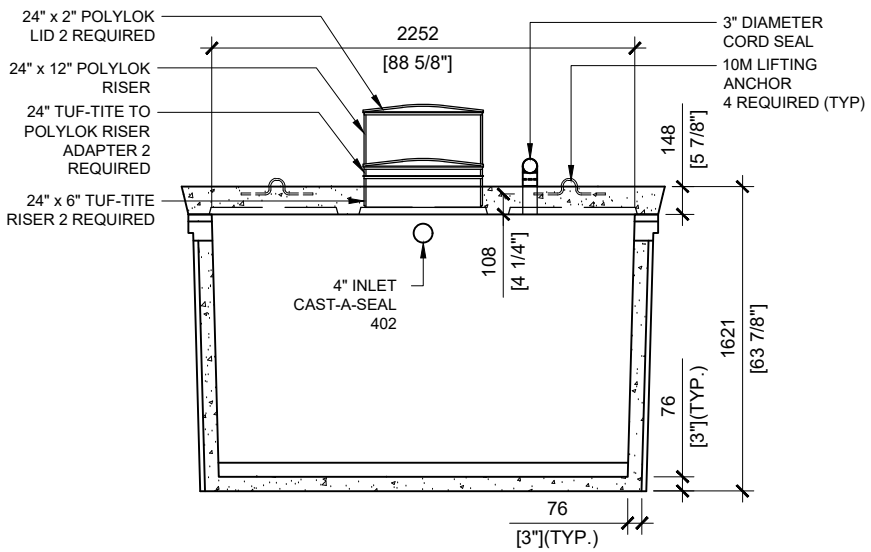

SECTION B
SCALE:1/40

BROOKLIN CONCRETE PRODUCTS

MANUFACTURED:
BROOKLIN, ON
1-800-655-3430

CONCRETE: 35MPa at 28 days/5000PSI
AIR ENTRAINMENT: 5-8%
REINFORCEMENT: STEEL TO CSA CAN A23.1 /A23.3 G30.18 Fy=400MPa

UNIT WEIGHT: 13,680lbs / 6,205kg
CPA CERTIFIED
MEETS CAN/CSA-B66
"AGINP"

DRAWN BY: N.CHAN

DATE: NOV/2020

WATERLOO PT-7000

1550 IMPERIAL GALLON / 7,000 LITRES